The Canadian Advanced Nanospace eXperiment 7 (CanX-7) Demonstration Mission: De-Orbiting Nano- and Microspacecraft

Barbara Shmuel, Jesse Hiemstra, Vincent Tarantini, Fiona Singarayar, Grant Bonin and Robert E. Zee
UTIAS Space Flight Laboratory
4925 Dufferin St., Toronto, ON, Canada, M3H5T6; +1 (416) 667-7993
bshmuel@utias-sfl.net

www.utias-sfl.net

ABSTRACT

As the number of objects in Earth orbit grows, the international satellite community faces a growing problem associated with orbital debris and space collision avoidance. In September 2007, the Inter-Agency Space Debris Coordination Committee (IADC) recommended that satellites de-orbit within 25 years after the completion of their mission, or within 30 years of launch if they cannot be parked in less dense ("graveyard") orbits. Governments around the world are introducing procedures to implement the recommendations of the IADC, and consequently, this requirement poses a significant programmatic risk for new space missions, especially those requiring rapid, responsive, short missions in low Earth orbit.

Unfortunately for nano- and microsatellites—which are ideally suited for responsive, short missions—no mature de-orbiting technology currently exists that is suitable for a wide range of missions and orbits. The CanX-7 (Canadian Advanced Nanosatellite eXperiment-7) mission aims to accomplish a successful demonstration of a low-cost, passive nano- and microsatellite de-orbiting device. Currently under development at the University of Toronto's Space Flight Laboratory, CanX-7 will employ a lightweight, compact, modular deployable drag sail to de-orbit a demonstrator nanosatellite. The sail design is highly compact, and a variant of this sail can fit onto even the smallest "cubesat"-based platforms. In order to facilitate acceptance and use by the industry, the sail is specifically designed to be minimally intrusive to the operational mission of the hosting satellite. CanX-7 will demonstrate the drag sail's ability to meet the requirements of the IADC and enable future missions to proceed without delays. A summary of the CanX-7 mission is presented along with the lifetime analysis and innovative features of the sail that make it attractive to future missions – missions that need de-orbiting assistance but that are sensitive to the risk and resource requirements associated with incorporating a de-orbiting device.

INTRODUCTION

As the number of objects placed in Low-Earth Orbit (LEO) increases, the risk of a collision occurring grows. Collisions lead to space debris, which can further increase the number of objects in high density orbits such as LEO. This potential domino effect threatens exponential growth of the orbital debris population if measures are not taken to mitigate debris. Current missions are threatened by the debris problem, which has the potential to end or disrupt operational satellites upon impact. A prime example of the reality of the situation was witnessed in February 2009 when the non-operational Russian satellite Kosmos 2251 collided with the active U.S satellite Iridium 33 [1]. The collision resulted in a large number of fragments that now pose a threat to other operational satellites.

Mitigating debris generation is vital for the continuation of safe space operation on orbit. In order to address this concern of outer space pollution, the Inter-Agency Space Debris Coordination Committee (IADC) has published the *Space Debris Mitigation Guidelines* report, which suggests a maximum 25-year lifetime after mission completion or within 30 years of launch for a satellite in LEO [2]. These guidelines are to minimize debris generation and serve as a safety measure for future space missions.

Consequently, the capability of de-orbiting a spacecraft becomes a concern for future satellites. The inability to present a credible de-orbiting plan for a satellite increasingly threatens to hinder such missions. This is particularly a concern for small satellites, which are often developed on aggressive, cost-constrained schedules, and where there may neither be budget nor physical provision for a dedicated de-orbiting device. Without a dedicated de-orbit strategy, small satellites at higher LEO altitudes may remain in orbit for up to a hundred years. Therefore, solving the debris problem is

imperative for micro- and nano-class satellites as the number of future launches will be affected without a reliable de-orbit technology.

MISSION SUMMARY

The CanX-7 (Canadian Advanced Nanostatellite eXperiment-7) spacecraft is a nanosatellite currently in development at the University of Toronto's Space Flight Laboratory for the purpose of demonstrating a de-orbiting technology for micro- and nanosatellites. Even though CanX-7 is a Triple Cube (3U) form factor – 10 × 10 × 34.5 cm – its novel drag-sail based de-orbiting payload is intended to demonstrate a modular, adaptable design that can eventually be scaled to other SFL spacecraft, such as the Generic Nanosatellite Bus (GNB) and Nanosatellite for Earth Monitoring and Observation (NEMO) bus designs.

The selected drag technology to be demonstrated on the CanX-7 mission must be capable of de-orbiting cubesats within the IADC required timeline. Several devices that can be utilized as de-orbiting devices for small satellites include: rockets, inflatables, rigidizable inflatables, electrodynamic tethers and drag sails. Several requirements that the drag device had to satisfy included being a passive device that does not require an active satellite to de-orbit, require no high pressurized containers to deploy which could potentially complicate obtaining a launch, and be testable in a 1-g environment to allow for testing prior to flight.

The drag sail was concluded to be the proper fit for de-orbiting cubesats. Other potential methods had several complications or didn't meet one or more of the requirements, making the development or inclusion a higher risk to the demonstration mission.

CanX-7 will accomplish its main objective by employing four deployable drag sails, each stowed within its own module, to demonstrate the ability to de-orbit at different rates while maintaining some redundancy in the de-orbiting system for the purpose of experimentation. These drag sail modules have either superior or competitive packaging and mass efficiency to state-of-the-art solar sails; and even at the demonstrator scale represent a sail design *for* cubesats, instead of a sail that simply fits inside a cubesat, while precluding any other useful payload. *CanX*-7 will also be used to validate de-orbit models to aid in the de-orbiting analyses of future SFL satellites. Prior to sail deployment, CanX-7 will operate a secondary payload, which will consist of an aircraft ADS-B receiver provided by COM DEV ltd., which will make CanX-7 the first satellite equipped to detect ADS-B signals from space with on-board signal processing. At the end of mission operation, the drag sail modules will be deployed in order to de-orbit the satellite, as shown in Figure 1.

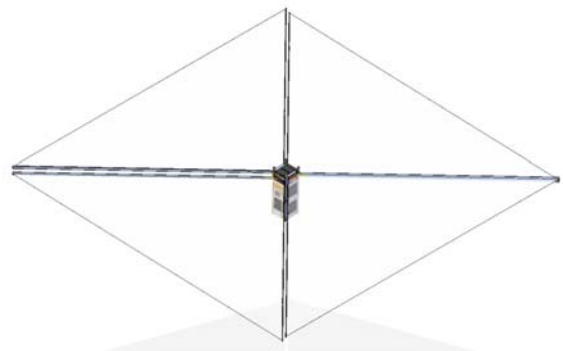

Figure 1 – CanX-7 spacecraft with deployed drag sail.

By demonstrating the success of the de-orbiting solution on-orbit, the drag sail will earn flight heritage, which will enable easier adoption into future missions. In using this de-orbiting technology (or larger upgrades) on future SFL satellites, the laboratory is helping to mitigate the global problem of orbital debris.

LIFETIME ANALYSIS

The drag sail device is required to de-orbit its host spacecraft within 25 years to meet IADC guidelines. It was sized with the aim of de-orbiting a reference spacecraft which is larger than CanX-7. Sizing for a larger spacecraft increases the versatility of the drag sail and will also facilitate a rapid (much less than 25 year) demonstration of the de-orbit technology during the CanX-7 mission. Early on in the development of the drag sail, an area of 4.0 m^2 was chosen to be sufficient to meet both of these objectives.

Various analyzes were completed in order to determine the required drag area to de-orbit within the set period of 25 years. The drag sail was chosen as the de-orbit device to demonstrate on the CanX-7 mission and therefore the expected lifetime and performance for this device had to be analyzed prior to beginning the detailed design of the drag sail device.

Methodology

A combination of fixed-attitude and variable-attitude simulations were performed in order to evaluate the de-orbit performance of the CanX-7 drag sail. The fixed-attitude simulations were performed using the de-orbit toolbox in Satellite Tool Kit (STK) and served as a baseline against which the variable-attitude simulations could be compared. The variable-attitude simulations were performed using a quasi-coupled, orbit-attitude dynamical numerical integrator using

MATLAB/SIMULINK. The term 'quasi' here refers to the fact that fully-coupled attitude-orbit simulations were not performed. Instead, the approach was to perform short-term, variable attitude simulations for many fixed orbits; the results from each of these static orbit cases were then combined to evaluate the overall performance of the drag sail over the de-orbit lifetime.

The constant-attitude and variable-attitude simulation techniques and results are discussed in the next two sections, respectively.

Constant-Attitude (STK) Simulations

An analysis was carried out to determine the required drag area of the sail in order to meet the lifetime requirement. STK software was used to model the satellite with the high precision orbit propagator (HPOP). STK was used to get an idea of lifetimes for different sized satellites.

The STK simulations for the CanX-7 satellite were completed at several different altitudes, chosen based on the altitudes of current and future satellite missions at SFL, as well as with drag coefficients of 2.2 and 2.4. The typically accepted value of 2.2 was found not to be representative of on-orbit conditions and 2.4 was found to be more realistic [3]. For comparison, de-orbit lifetime results using both drag coefficients are shown in Figure . The lifetimes for the CanX-7 satellite are well below the IADC recommendation of 25 years to facillate a potentially quicker deorbit or to act as functional redunancy.

Variable-Attitude Simulations

The STK simulations described in the previous section do not account for the time-varying nature of the spacecraft's projected drag area. For on-orbit satellites the instantaneous projected area will be a function of attitude. Even with an aerodynamic drag device which is designed to take advantage of the "shuttle cock" effect, achieving an aero-stable configuration is unlikely at altitudes above 650 km and perhaps even lower depending on the spacecraft and sail properties [4]. This can be realized by examining Figure which shows the upper limits of disturbance torque magnitudes expected for a small satellite in LEO. Note that in Figure 3, a band is shown for each disturbance; the band captures the range of maximum torque which is dependent on various spacecraft and environment parameters. It can be seen that above 600 to 650 km the geomagnetic disturbance due to the inherent residual magnetic dipole moments of the spacecraft will dominate. It is not until the altitude drops to around 450 km that the aerodynamic disturbance becomes dominant and aero-stabilization could be reasonably expected. This is especially difficult for highly asymmetric spacecraft such as CanX-7 which has a wide range of projected areas, varying from 0.034 m^2 when the drag sail is edge-on to the velocity vector, to a maximum of 4 m^2 when the drag sail is perpendicular to the velocity vector. In a word, relying on de-orbit analyses which assume constant drag area could give very misleading results. It is therefore necessary to account for the attitude dynamics when assessing the de-orbit performance.

Decoupling the Attitude and De-Orbit Dynamics

Performing fully coupled attitude and de-orbit simulations is impractical due to the very different associated timescales. To adequately simulate attitude dynamics, the required maximum timestep is on the order of seconds. Propagating for a full 25 year de-orbit period would require on the order of at least 100 million integration steps. Furthermore, due to the uncertainty in final spacecraft and orbit parameters, many such simulations must be performed to ensure the design

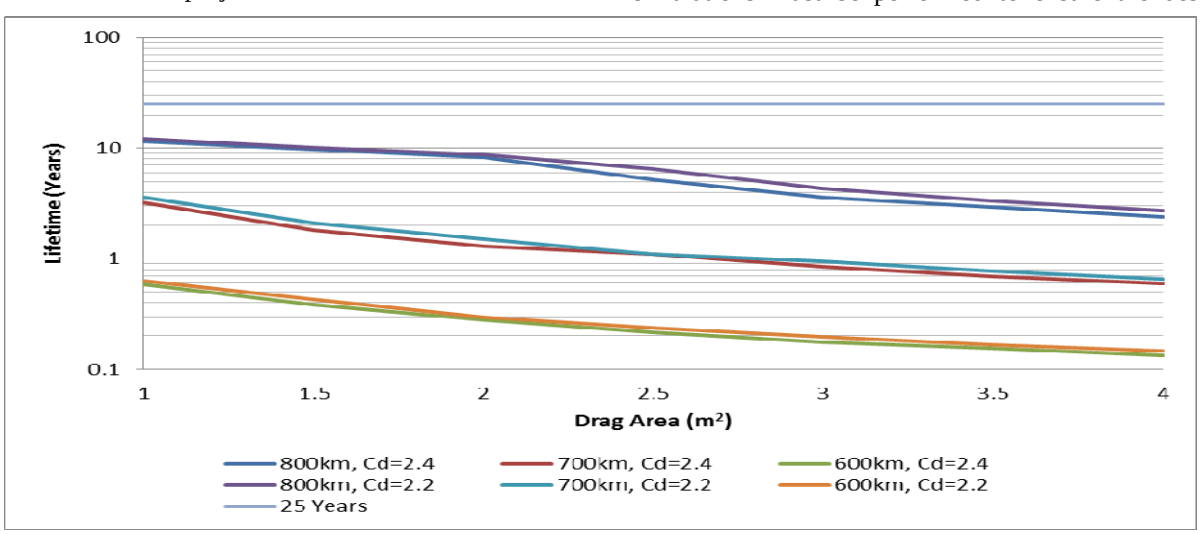

Figure 2: Required drag area to de-orbit from different altitudes.

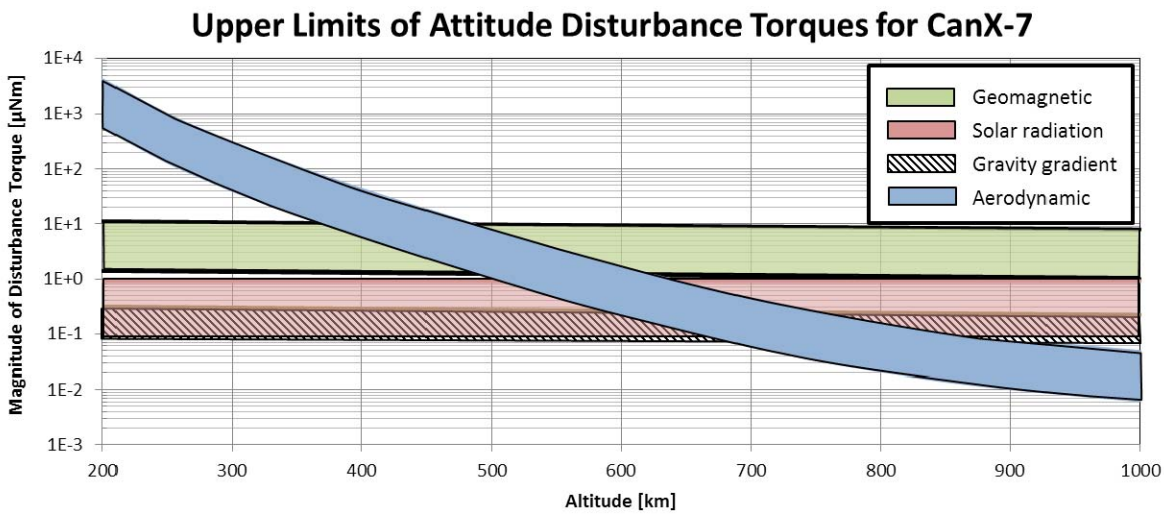

Figure 3: Maximum attitude disturbance torques experienced by the CanX-7 spacecraft

meets the requirements in all expected configurations.

An alternative approach was developed which effectively decouples the orbit and attitude simulations. The methodology uses short-term (on the order of 10's of orbits) attitude simulations to evaluate the de-orbit performance in individual slices of an entire solar cycle (approximately 11 years). The results from many of these slices are then combined appropriately to arrive at a result which approximates the de-orbit performance for the entire solar cycle. The output of this analysis is referred to as the Whole Solar Cycle Effective Area (WSCEA) and can be compared directly against the constant-area simulations performed using STK to estimate the de-orbit lifetime.

Design of Experiments

The primary system parameters which affect the WSCEA are: orbit altitude, inclination and local time at the ascending node (LTAN); spacecraft residual magnetic dipole; spacecraft mass moment of inertia (MOI), configuration of drag sail (see Figure), and the inherent damping of the spacecraft (due to structural damping, magnetic eddy current damping, , etc.). While some of these parameters can be estimated to a reasonable accuracy during the design and development of the spacecraft (i.e., spacecraft MOI and configuration of drag sail), the rest will not be defined until the spacecraft is fully assembled and the operational orbit is selected. For this reason, a design of experiments was developed which enveloped all of the possible configurations of spacecraft and orbit.

Orbit and Spacecraft Configurations

The considered orbits were sun-synchronous orbits (SSO) with an altitude of 800 km which is the worst case from a de-orbit performance point-of-view (note that the drag sail is designed to de-orbit spacecraft with altitudes of 800km or less). Although the drag sail is designed to work within any near polar orbit (with inclinations between 80 and 100 deg), only SSO were analyzed since they envelope the rest in terms of de-orbit performance; if the orbit is not sun-synchronous, the performance tends to average out over time, having weaker performance with LTANs near 0600 or 1800 hrs, and increased performance with LTANs near 1200 or 2400 hrs. By considering orbits with constant LTANs, upper and lower limits can be put on the expected performance. Table 1 shows a summary of the considered orbits.

Aside from inherent damping, the residual magnetic dipole moment of a satellite is the spacecraft-dependent parameter that has the greatest effect on the de-orbit performance, because it has the greatest impact on spacecraft attitude during periods when solar disturbances are low. To understand the sensitivity of de-orbit performance to the magnitude and orientation of the residual dipole, seven spacecraft configurations were considered that envelope the expected design range for the CanX-7 spacecraft. Table 2 summarizes the considered configurations; the direction refers to the angle between the sail plane and the residual dipole of the spacecraft, when the dipole points in a direction parallel to the drag sail plane the angle is 0 deg.

Table 1: Considered orbits for the design of experiments

Parameter	Units	Considered Values
Altitude	km	800
Inclination	deg	80, 90, 100
Constant Local Time at the Ascending Node	HHMM	0300, 0600, 0900, 1200, 1500, 1800, 2100, 2400

Table 2: Considered spacecraft configurations

Residual magnetic dipole moment	Spacecraft configuration						
	1	*2*	*3*	*4*	*5*	*6*	*7*
Magnitude [Am^2]	0	0.05			0.10		
Angle between drag sail plane and residual dipole [deg]	-	0	45	90	0	45	90

Results

The results from the design of experiments are displayed in Figure which shows the Whole Solar Cycle Effective Area (WSCEA) for orbits with altitude 800 km, inclination of 100 degrees, and various LTANs; the results for other inclinations follow the same trend.

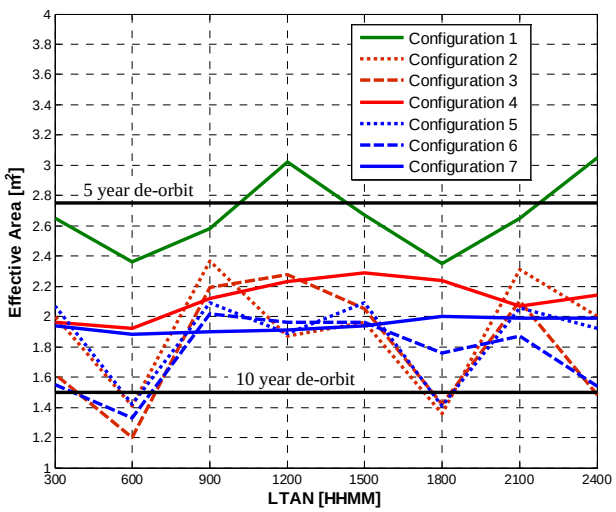

Figure 4: WSCEA results for inclination of 100 deg

De-orbit Lifetime for the CanX-7 Mission

In general, the results indicate that the WSCEA for the CanX-7 mission will be between 1.2 and 3.0 m^2 with an average of about 2.1 m^2 (at the maximum initial altitude of 800 km). Comparing this to the results from the constant-area lifetime simulations shown in Figure , the de-orbit lifetime from 800 km for the CanX-7 spacecraft will be between 4 and 10 years depending on the magnetic properties of the spacecraft. The 4 m^2 SFL-designed drag sail is therefore sufficient to meet the de-orbit requirements.

DRAG SAIL

The CanX-7 de-orbiting payload is intended to be a completely passive system, thus avoiding the need for any attitude control of the host spacecraft. This consideration, as well as the perceived complexity of other de-orbiting technologies such as tethers, led to the adoption of a drag sail-based approach. While the CanX-7 payload is sized for a cubesat form factor, the intent is to scale the sail for larger missions up to the microsatellite class, either by growing the sail, adding additional sail modules, or both. The sail design takes a modular approach in which four identical modules can be mounted on a satellite with a suitable flat surface, and may be commanded from a ground station via a connection to the spacecraft's uplink radio.

The drag sail modules are conceptualized to be compatible with the three standard UTIAS-SFL-made spacecraft buses as shown in Figure . Each drag sail module is triangular in shape, and deploys a 1 m^2 triangular sail formed from metallized polymer film supported at each corner (Figure). Four modules are deployed to form a complete square sail. The plane of the drag sails is offset from the spacecraft's center of mass, creating the potential for an aero-stable attitude at low altitudes.

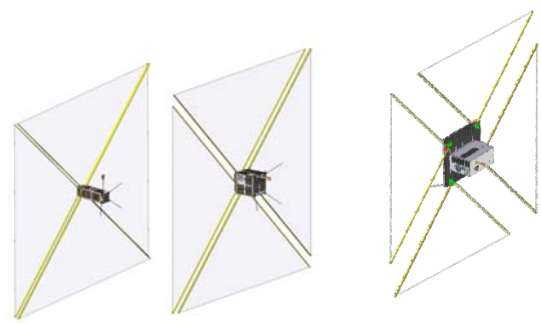

Figure 5: Four sail modules integrated with CanX-7 (left), GNB (middle), and NEMO (right) spacecraft.

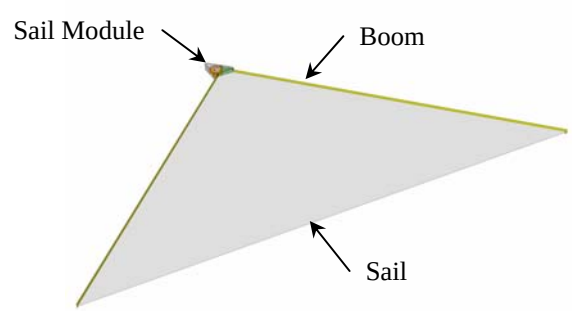

Figure 6: Drag sail module, deployed.

Details of the current drag sail module prototype are shown in Figure . The module consists of a housing, COTS tape-springs that are stowed inside, and a folded

sail packed into a removable cartridge with a hinged door. The root of each tape spring is attached to a rotating reel, with their free ends wound around its perimeter. Nine rollers form an enclosure and constrain the coiled tape to a roughly circular shape without imposing excessive friction that resists unrolling. Upon receipt of the deployment command, the spring-loaded sail cartridge door swings open and removes the structure restraining the boom tips in place. The booms are forced out by their internal strain energy as they relax to their naturally straight shape, and draw the sail out from inside of its cartridge. For testing, an external piece of ground support equipment will be used to rewind the booms back into the sail module so that it may be operated multiple times.

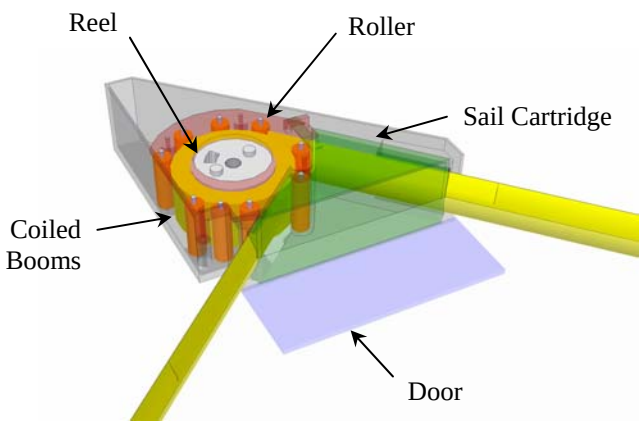

Figure 7: Basic components of drag sail module rapid prototype.

Module Placement and Shape

The modular approach to the design of the CanX-7 de-orbiting payload allows for integration with any compatible spacecraft without substantially altering the existing bus design. In comparison, an integrated approach in which the drag sail components are housed by the existing bus structure would demand increased engineering effort beyond the scope of the mission for which the sail is designed. However, this choice means that opportunities for platform-specific optimization are traded for cross-platform compatibility.

The adoption of several modules, as opposed to a single module, creates more options for placement on irregularly shaped spacecraft. For integration with a cubesat bus, the modules are stacked atop one of the forward or aft square faces. Stacking the modules or covering them with solar panels (Figure , left) eliminates the possibility of accessing their interior from the top or bottom face. This imposes a design constraint whereby the deployment mechanism and sail stowage solution must allow for access from the side panels for rewinding and repacking during testing of the fully-integrated spacecraft.

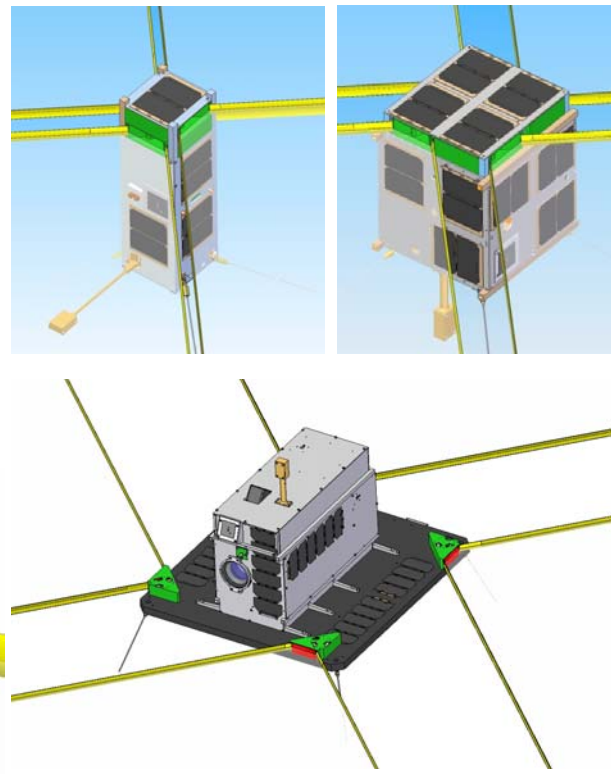

Figure 8: Drag sail module placement on a triple cubesat (left), GNB (right), and NEMO (bottom) bus.

Integration with the other busses is more straightforward. For integration with a larger cube-shaped bus such as the Space Flight Laboratory's GNB, the modules are simply mounted on one of the exterior faces, and covered with a solar panel (Figure , right). On the NEMO bus the multi-module approach is particularly convenient, because it allows four modules (or more) to be mounted around the perimeter of a bus face, without requiring the whole face to be free of protrusions that might obstruct the sail's deployment (Figure , bottom).

The choice of a triangular sail module shape allows the booms to follow a straight path as they exit the module, which results in less resistance to tape motion than curved tape paths. The resulting footprint of the reel and straight tape paths lends itself to placing two triangular modules side-by-side to form a square, which conveniently matches the cross section of a cubesat. Therefore, within the same volume both modules may be twice the height while using half the footprint of a square module. This height is used to accommodate ¾ inch-wide tape springs, which are sufficiently stiff to deploy the sail onto a smooth flat surface, and in certain

orientations to support their own weight in a 1 *g* environment.

Deployment Mechanism

The CanX-7 payload works on the basic principle of stored mechanical energy. Stored mechanical energy is perceived to be more reliable than electrically driven deployment and require less capability from a spacecraft's power system, which may become unreliable or have diminished output at the end of its life.

The use of tape springs wound on a reel arose out of a desire to use COTS parts for simplicity and rapidity of prototyping. A reel is the natural shape for storing tape springs, and is used in similar deployable structures such as the Rolatube bistable reeled composite [5], lenticular cross section booms [6], TRAC boom [7], and STEM–derived booms [8]. Conveniently, tape springs are capable of not only forming the stiff boom structure, but of providing the energy for their own deployment as well.

The use of the tape springs as the source of energy for deployment means that they must be stored in an enclosure that converts the uncoiling motion of the tape springs into linear motion of the booms. The sail module's circular tape enclosure serves this purpose, and is formed from rollers which exert little resistance against the rotational motion of the coiled tape springs.

The tapes are prevented from deploying by restraining them at the free ends that form the boom tips. This is accomplished by means of a door. The door will be opened by a torsion spring, and held closed by a pin that will positively prevent the door from opening due to vibration during launch. This "door release mechanism" will be disengaged to trigger deployment.

A piece of ground support equipment will serve as a separate "rewind mechanism" used to retract the booms into the sail module, when the interior of the module is inaccessible. The rewind mechanism will consist of an external rewind gear that will interface with a set of gear teeth located around the perimeter of the reel. A ratchet will prevent rotation of the external gear in the deployment direction.

A sequence of images showing the deployment of a full-scale sail module prototype is presented in Figure :

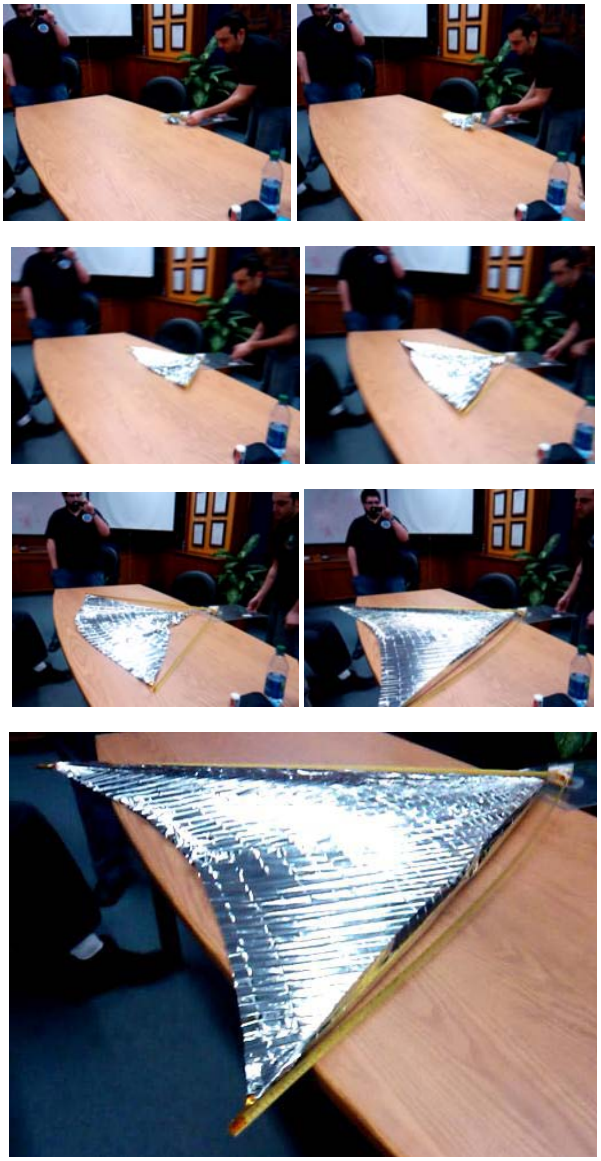

Figure 9: Deployment of full-scale drag sail prototype.

Boom material and performance

Unlike a solar sail, a drag sail needs only to present frontal area in the ram direction without any need for the membrane to be made flat by holding it in tension. Therefore, the open section of tape-springs that otherwise makes them unsuitable for supporting longitudinal compression loads is acceptable for this application, in which they are loaded primarily in bending by the extremely small drag force. To ensure that the tape springs are loaded in a direction in which they resist bending loads, the booms are oriented such their convex side faces the sail. Each outboard corner of the triangular sail is attached to the boom tips by a pair of flexible lines that connect to the two corners of the boom section (Figure).

The magnitude of the drag load varies with the projected area of sail in the velocity direction. The greatest drag load occurs when the sail is face on to the velocity vector, as might occur when the spacecraft aero-stabilizes at lower altitudes. Under a drag load roughly perpendicular to the unloaded plane of the sail, the line closest to the direction in which the load is applied carries the majority of the sail tension, which imparts a moment to the boom tip that causes the entire boom to twist such that the concave side of the boom faces the direction of load application. On the ground, the result of this mounting arrangement is that the booms deform to a shape in which they are sufficiently strong to withstand the combined load of the sail's weight and the boom's weight (Figure). On orbit, the sail will be subjected to vastly smaller loads: At 300 km (the lowest altitude at which the sail is required to operate) the distributed drag force on each sail segment will be approximately 2 mN, which is more than 100 times less than weight of the sail film alone.

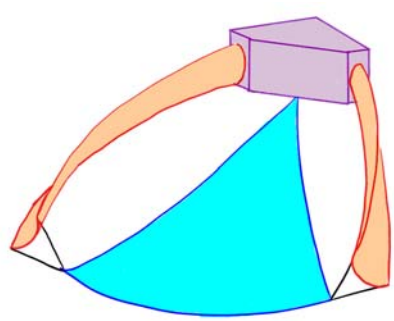

Figure 10: Sail attachment and boom deformation under Earth-gravity.

Sail Material and Stowage

The sail will be formed from metalized polymer film. Metallization is employed to protect the polymer from atomic oxygen and UV radiation. Ideally, the sail material would be transparent to eliminate disturbance torques from solar radiation pressure that, in polar sun synchronous orbits, serve to stabilize the sail into attitudes where it presents less area in the ram direction. However, resilient transparent polymer films (eg. LaRC-CP1) are challenging to acquire due to export control laws. (Incidentally, metallized films of any kind thinner than 7.6 µm (.00030 in.) are difficult to acquire for the same reason.) Therefore, 12.7 µm (.00050 in.) thick Kapton film with a 300 Å aluminum coating on both sides will be employed as the sail material. Kapton is capable of withstanding the expected worst-case hot temperature of ~ 225° C that the sail will reach in direct sunlight.

The sail module is required to be re-stowable without substantial disassembly or any de-integration from the spacecraft. Therefore, the sail is folded and packed into a separate sail cartridge that may be installed in the sail module, and removed after a deployment. The sail cartridge incorporates a door that serves the dual purpose of restraining the tightly packed sail material and restraining the spring-loaded boom tips. Compared to installing a loose sail bundle into an integrated sail module directly, installing a cartridge reduces the risk of damaging the sensitive solar cells and thermal coatings on the exterior of the spacecraft.

The sail is folded in an accordion or "Z" pattern in two perpendicular directions. The first direction is parallel to the outboard sail edge, and the second direction folds the resulting strip into a bundled shape that matches the irregular layout of the sail cartridge. The fold does not form enclosed volumes that could trap air, and is simple to re-fold, re-pack, and re-use.

Sail Module Electronics

The electronics within the sail module are straightforward. The internal electronics are responsible for interpreting deployment commands sent from the ground received via the spacecraft's command receiver, driving the release mechanism actuators, and polling sensors to gather telemetry indicating whether the sail is stowed or deployed. The sail modules are connected to a multi-drop command and telemetry bus, and may be physically connected in either a daisy chain or star topology.

The modules receive commands and send telemetry over a half-duplex multi-drop RS-485 connection. The choice of a multi-drop digital interface eliminates the

need for unique signal wires dedicated to each module. Since full-duplex communication is not necessary in this application, the choice of half-duplex reduces the number of interface wires that must be routed through the bus to the group of modules.

An outboard "command decoder" module mediates between three data busses: The sail module's half-duplex RS-485 data bus, the spacecraft housekeeping computer's (HKC's) full-duplex single-ended low-voltage asynchronous serial data bus, and the UHF command receiver's synchronous serial data bus. The command decoder continuously monitors the data received from the uplink receiver for unique "firecodes" that serve as deployment commands for each sail module. If the command decoder intercepts a firecode, it will pass that firecode on to the sail modules which interpret it as a command to deploy. Concurrently, the command decoder also passes commands and telemetry back and forth between the HKC and the sail modules. This way, the command decoder allows the sails to be commanded to deploy without the need for the HKC, and indeed will prevent it from erroneously commanding deployment by filtering out firecodes received from the HKC's data bus. Deployment may be commanded even if the only operational units on the spacecraft are the sail modules, the uplink receiver, and the command decoder. On CanX-7, the spacecraft's receiver is continuously powered, and the sail modules will be connected to a normally-on power switch that may be switched off to conserve power. Therefore, CanX-7 will default to a ready-to-deploy state even if the spacecraft is not able to transition out of its safe-hold mode. For other missions where deploying the sail is not the primary objective, the spacecraft will likely be configured such that the sail modules are unpowered in safe-hold mode to prevent accidental deployment that would jeopardize the mission.

The high-level architecture is shown in Figure 1.

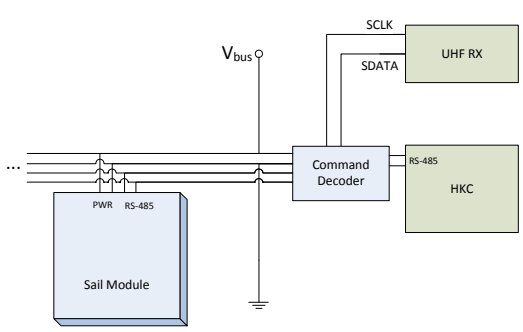

Figure 1: Drag sail electrical architecture.

Each drag sail module will contain a microcontroller, actuator, and sensors. The microcontroller accepts commands to poll sensors and return telemetry, and firecodes to command deployment. By using a microcontroller, the number of discrete components is reduced, and the software for driving the sensors and actuator is moved from an external computer onto a simpler and more unit-level-testable platform.

An actuator and appropriate driver will trigger the module's internal mechanisms. The sensors, consisting of switches and position encoders, will indicate if the sail is likely stowed or deployed based on the reported state of the internal mechanisms.

CONCLUSION

The CanX-7 mission will demonstrate the de-orbiting of a nanosatellite using a drag sail device. The mission is being carried out to mitigate the orbital debris problem and to space qualify a de-orbiting device that will allow easier adoption into operational missions by the small satellite industry. The drag sail was chosen as the de-orbiting device based on it being a passive device that could de-orbit cubesats in a period of 25 years. The device provides a drag area of 4.0 m^2 and deploys through the use of stored strain energy. The modularity of the design allows it to eventually be adaptable to different platforms and makes it more versatile then a centralized device. After demonstration on CanX-7, the de-orbiting technology can be developed further to suit larger missions. The drag sail device can then be utilized by small satellites and ensure the launch of future missions.

ACKNOWLEDGEMENTS

The authors would like to thank the funding partners for the CanX-7 mission: the Natural Sciences and Engineering Research Council (NSERC), Defence R&D Canada-Ottawa (DRDC-Ottawa), and COM DEV Ltd.

REFERENCES

[1] L. Anselmo and C. Pardini, "Analysis of the Consequences in Low Earth Orbit of the Collision between COSMOS 2251 and IRIDIUM 33," *21st International Symposium on Space*, Issue 1, 2009.

[2] IADC Space Debris Mitigation Guidelines, IADC-02-01, September 2007.

[3] I.K. Harrison and G.G. Swinerd, "A free molecule aerodynamic investigation using multiple satellite analysis," *Planet Space Sci*, Vol.44, No.2, pp. 171-180, 1996.

[4] D.C. Maessen, E.D.v. .Breukelen, B.T.C. Zandergen and O.K. Bergsma, "Development of a Generic Inflatable De-Orbit Device for Cubesats," Deflt University of Technology, Delft, Netherlands, 2007.

[5] "Rolatube Technology Briefing." [Online]. Available: http://www.rolatube.com/technology-showcase. [Accessed: 02-Jun-2012].

[6] J. Block, M. Straubel, and M. Wiedemann, "Ultralight deployable booms for solar sails and other large gossamer structures in space," *Acta Astronautica*, vol. 68, no. 7–8, pp. 984-992, Apr. 2011.

[7] T. Murphey and J. Banik, "Triangular rollable and collapsible boom," U.S. Patent 7895795 B12011.

[8] "Tubular Spacecraft Booms," in *Nasa Space Vehicle Design Criteria (Guidance and Control)*, no. February, 1971.